Residential Energy Storage
Hope 16.0LM-A1 Battery System
User Manual

Download Manual

Growatt New Energy

Shenzhen Growatt New Energy Co., Ltd.
4-13/F, Building A, Sino-German (Europe) Industrial Park,
Hangcheng Blvd, Bao'an District, Shenzhen, China

E service@growatt.com
W en.growatt.com

For local customer support, please visit https://en.growatt.com/support/contact

(PN: 044.SK0021502)

Table of Contents

1 Product Overview 1

1.1 Product Description 1

1.2 Appearance 1

1.3 LCD display information 2

1.4 Function and Introduction 7

1.5 Battery software upgrade 9

2 Safety 9

2.1 Application 9

2.2 Safety Precautions 10

2.3 Warning labels 11

2.4 Emergency Responses 11

3 Storage and Transportation 12

3.1 Storage Requirements 12

3.2 Transportation Requirement 12

4 Installation 13

4.1 Installation Environment 13

4.2 Installation Required Tools 13

4.3 Check 13

4.4 Installation 14

5 Power on/off 21

5.1 Power on 21

5.2 Power off 21

6 Maintenance Guide 21

6.1 System Failure Information List and Trouble Shooting Suggestions 21

7 Technical Specifications 23

Appendix 1 Fault code table 24

Appendix 2 28

1 Product Overview

1.1Product Description

Hope 16.0LM-A1 consists of 314Ah cells which form 51.2V voltage battery module and 16 cells in serial connection (1P16S). Max parallel number is 48pcs which can expand the capacity to up to 768KWH. Support LCD screen display and setting. For meeting the needs of home storage power supply, protection functions such as overcharge, over-discharge, over current, over temperature, and short circuit. and equipped with APP display function, remote upgrade function and U-disk upgrade function.

1.2 Appearance

Hope 16.0LM-A1 consists of battery module (including cells and mechanical parts), battery management system (BMS) as well as power switch and communication terminals. Product appearance as below.

1.2.1Dimension (unit:mm)

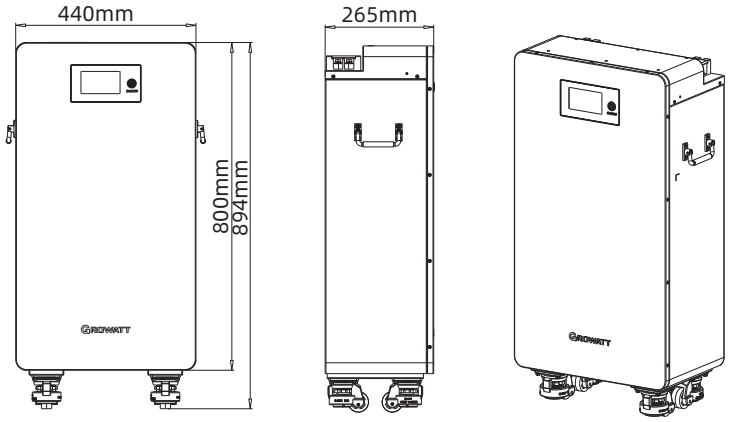

Figure 1: Battery size diagram

1.2.2 Introduction to the battery operation panel

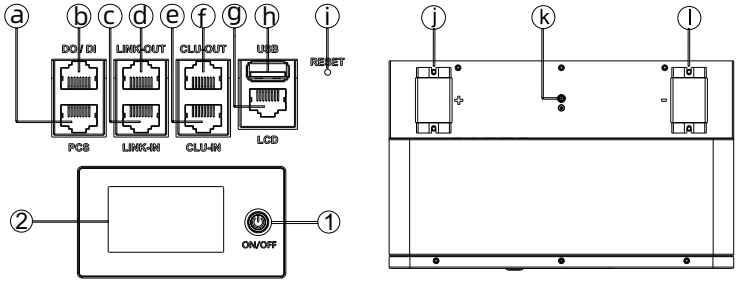

Figure 2: Introduction to the battery operation panel

Location	Port	Function
a	PCS	Communicate with the inverter
b	DO/DI	Emergency signal output/input port
c	Link-In	Battery parallel communication (CAN/WAKEUP/MASTER)
d	Link-Out	Battery parallel communication (CAN/WAKEUP/SLAVE)
e	Clu-In	Clustering communication
f	Clu-Out	Clustering communication
g	LCD	For linking external integration LCD
h	USB	USB interface for system upgrade, a mobile phone can't be charged
i	Reset	Pressing triggers MCU reset
j	P+	Battery Positive
k	GND	GND
l	P-	Battery Negative
1	ON/OFF	Power on/off Button
2	LCD	Displaying battery data

1.3 LCD display information

The LCD adopts a touch resistive screen. The screen is off by default for 30 seconds. You can light up and switch the screen pages by touching it with your finger. It includes main information, individual information, fault information, equipment information and setting parameters.

Page information	LCD display
Real page 1 ①Master/slave identification ②Battery SOC(%) ③Battery voltage(V) ④Battery current(A) ⑤State Explanation: During the parallel operation, the LCD screen of the main unit displays that both the SOC and voltage are the average values, while the current is the total sum of the currents of each unit.	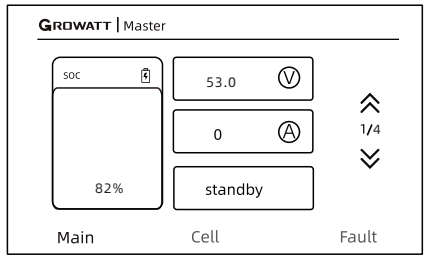

Page information	LCD display
Real page 2 ①Battery voltage(V)/current(A) ②Battery SOC(%)/State ③High Cell volt(mV) /Low Cell Volt(mV) ④High cell temp/Low cell temp ⑤Allowable charging current/Allowable discharge current	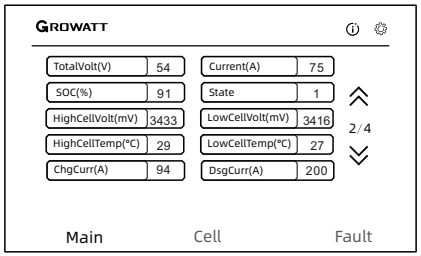
Real page 3 ①Cluster address /Cluster number ②parallel address /parallel number ③Load Volt(V) / SOH(%) ④High Cell volt(mV) /Low Cell Volt(mV) ⑤Number of cycles /balance state ⑥Charge MOS state/ Discharge MOS state	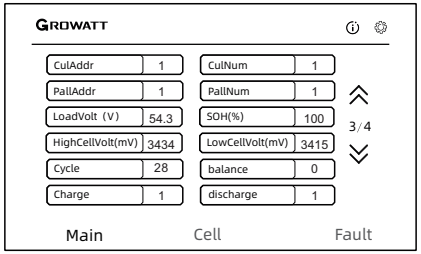
Real page 4 ①High cell temp/Low cell temp ②Environment temp/MOS temp ③Remaining capacity/Full capacity ④Allowable charging current/Allowable discharge current ⑤Cumulative charging capacity/ Cumulative discharge capacity	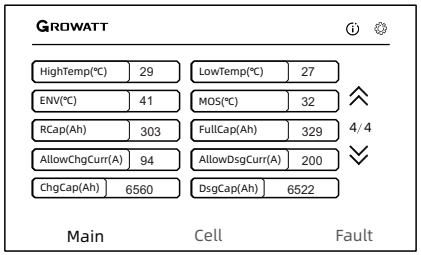
Cell page ①Cell volt 01-04 ②Cell volt 05-08 ③Cell volt 09-12 ④Cell volt 13-16 ⑤Cell Temperature 01-04 ⑥Cell Temperature 05-06	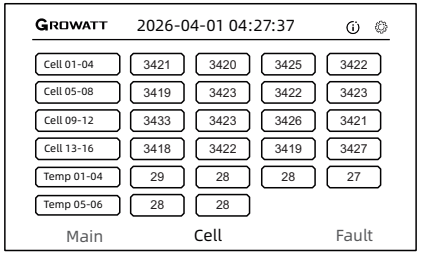

Page information	LCD display
Severe page For detailed analysis of fault codes, please refer to Appendix 1	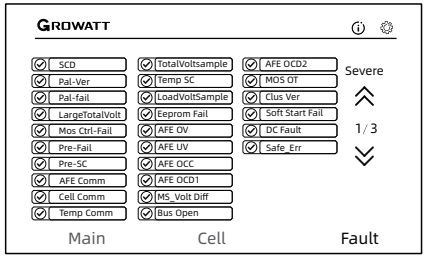
Moderate page For detailed analysis of fault codes, please refer to Appendix 1	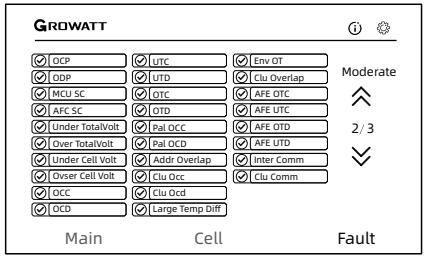
Minor page For detailed analysis of fault codes, please refer to Appendix 1	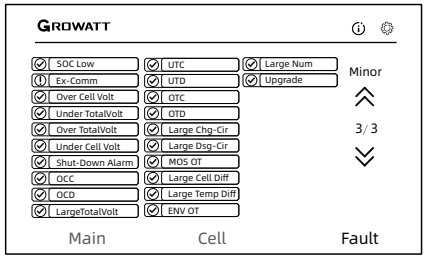
Device evice info page ①SN ②LCD Ver ③BMS Ver ④Fault list （Switch the fault page by using the up and down arrows， For detailed analysis of fault codes, please refer to Appendix 1）	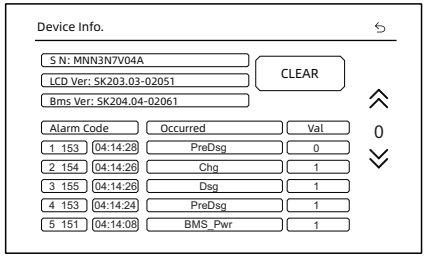

Page information	LCD display
Setting menu page ①General Set ②Advanced Set	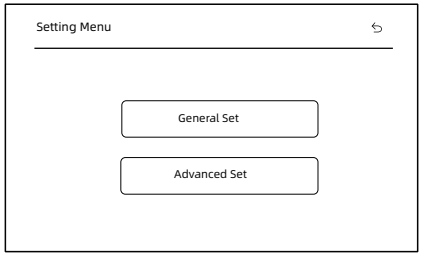
General Set page Enter the password 1859 and press OK to enter; ①Language set ②Time Set ③Protocol Setting	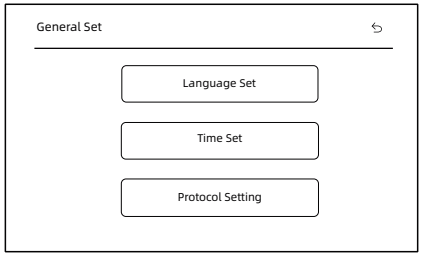
Language Set page Can switch to English, Chinese, español, and Portuguese	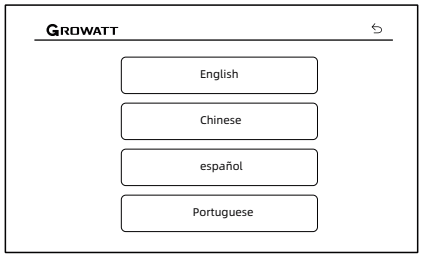
Time Set page	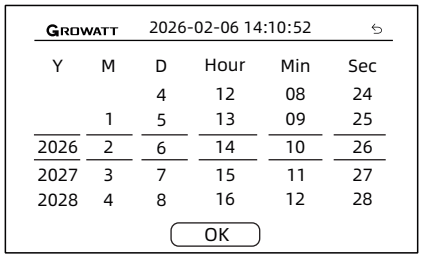

Page information	LCD display
Protocol Setting page Click on different protocols to switch	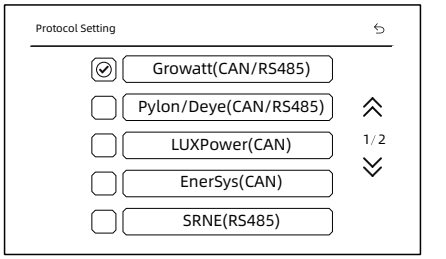
	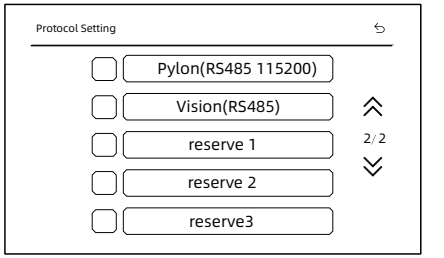
Advanced Set page Enter the password 1859 and press OK to enter	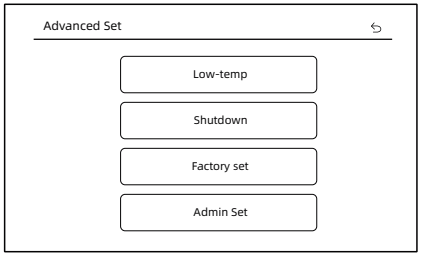
Low-temp Low-temperature discharge function enabled. After activation, discharging is possible below 0 degrees Celsius, but charging is not allowed. Please avoid power supply.	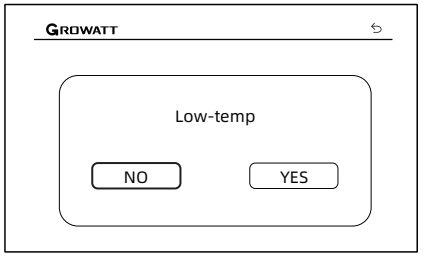

Page information	LCD display
Shutdown Click "YES" to perform the shutdown operation.	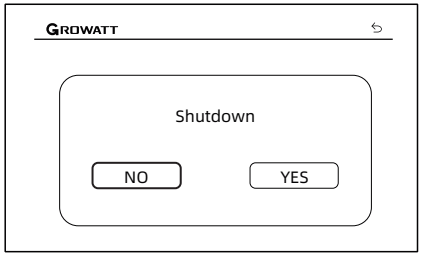
Factory set Clicking "YES" will restore the factory settings.	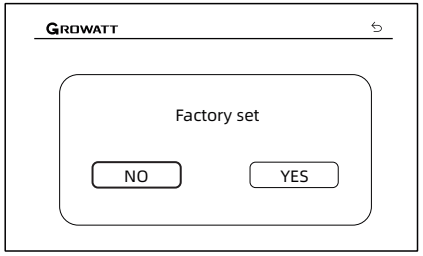

1.4 Function and Introduction

Function	Description
APP Display and Upgrade	Display BMS information and upgrade
CAN communication	2 Circuits, with isolation, One for battery parallel communication, the other for communication with inverter
Battery in Parallel	It is best to use within 16 parallel units, with a maximum of 48 parallel units
SOC Algorithm	Dynamic SOC estimation for battery packs
SOP Algorithm	Based on different temperature, The evaluation capacity of voltage and SOC to the maximum output or maximum input at the next moment
Running Status Display	LED lights to display Green: System running status

Function	Description
Power off	1.Button Shutdown, 2.No Communication Shutdown, 3.Battery Low Voltage Shutdown 4.When Used in Parallel, it Can Be "One Key Shutdown.
Power on	1.Key On, 2.Charge On, 3.Activate Signal on, 4.When Used in Parallel Can "One Key On".
Balanced Management	Improve the consistency of the voltage of each single battery to protect the battery.
Voltage Detection	Detect single cell voltage (16 strings) or total voltage (2 circuits).
Current Detection	Battery charging current, discharging current detection.
Temperature Detection	Total 8 circuits. 6 circuits for battery temperature detection, 1 circuit for Mosfet temperature detection, 1 circuit for battery internal ambient temperature detection.
Protection	overcharge protection, over discharge protection, over-voltage protection, high temperature protection, low temperature protection, short circuit protection and hardware fault protection, etc. with record function for the fault alarm and protection, which is convenient for after-sales viewing and analysis of problems.
Pre-charge Control	Charging low-voltage batteries with low current.
Pre-discharge Control	Pre-charge the inverter capacitors.
Interface	Same port .

1.5 Battery software upgrade

1.5.1 Upgrade via USB

1. Copy the upgrade file into the U disk.
2. Turn battery off, access U disk.
3. Turn on battery and successfully enter the upgrade state, the RUM led will blink for 3 seconds at the same time.
4. If the battery starts properly, the upgrade is complete.

Note: Choose the USB upgrade mode, there must be no other files in the U disk, otherwise the upgrade will not be possible or the upgrade error.

1.5.2 Upgrade via Inverter

1. Connect to WiFi monitor for remote upgrade through inverter.
2. The LCD displays the upgrade screen,Show Progress Bar.
3. When the Progress Bar reaches 100% , the upgrade is complete.

Note: Inverter remote upgrade mode can only upgrade the battery host,After the host upgrade is completed, the host will upgrade all slaves.

2 Safety

Safety information contains in this section must be observed at all times when working on or with batteries.For safety, installers are responsibility to familiarize themselves with this manual and all warnings before installation.

2.1 Application

Please read the product manual and the warning signs on the surface of the battery box carefully before using the battery. Improper use of the battery may cause overheating and damage to the battery. The company does not assume any responsibility for any accidents caused by improper operation. In order to use and dispose of the battery safely, please read the operating instructions carefully before use:

- Keep the batteries away from heat sources, high voltage places and long periods of sunlight exposure.
- Batteries must not be thrown into water or fire.
- Do not reverse the positive and negative terminals of the battery.
- Do not use metal to short the positive and negative terminals of the battery.
- Avoid excessive physical shocks and impacts to the battery, do not hit, drop or step on the battery.
- It is strictly forbidden to disassemble or assemble the battery privately without the permission and guidance of the manufacturer.
- Cannot mix other batteries of different manufacturers, types and models.

- Do not use or store in high temperature environments, as this may cause the battery to heat up, catch fire or have a reduced service life.
- Charge the battery promptly (within 15 days) after it runs out of charge.
- Please use the matching or recommended professional lithium battery charger.
- Stop using the battery if it has abnormal conditions such as odor, discoloration, noise, liquid leakage, or serious deformation.
- If electrolyte leaks into the skin or eyes, flush with water and seek immediate medical attention.
- Please place the battery out of the reach of pets and children, and prohibit children from touching the battery.
- Below 0℃, due to the low temperature performance of the battery, please reduce the power to use, a battery pack with a load of 2.5KW or less.

2.2 Safety Precautions

2.2.1 Environment requirements

- Do not expose the battery to temperature above 60℃ ,or heat sources.
- Do not install or use the battery in wet locations, moisture , corrosive gases or liquids, such as bathroom.
- Do not expose the battery to direct sunlight for extended periods of time.
- Place battery in safe place away from children and animals.
- Battery power terminals shall not touch conductive objects such as wires.
- Do not dispose the batteries in fire, which may cause an explosion.
- The PACK shall not come in contact with liquids.
- The PACK can only be installed indoors. Regarding indoor installation, please do not install it in the bedroom, living room, kitchen, etc.

2.2.2 Operation and Precautions

- Do not touch the PACK with wet hands.
- Do not disassemble the PACK without permission.
- Do not crush, drop or puncture the PACK and battery.
- Dispose the batteries according to local safety regulations.
- Store and recharge battery in accordance with this manual.
- Ensure the connection of ground wire reliable.
- Remove all metal objects such as watches and rings that could cause a short-circuit before installation, replacement and maintenance.
- The Pack shall be repaired, replaced or maintained by skilled personal that has been recognized.
- When storing or handling batteries, do not stack batteries without package.
- Do not broke the battery, the released electrolyte may be toxic and is harmful to skin and eyes.
- Packaged batteries should not be stacked more than specified number stipulated on the packing case.

- Do not use damaged, failed or deformed batteries, which may lead to high temperature or even dangerous accidents. Continued operation of damaged battery may result in electrical shock, fire or even worse.

2.3 Warning labels

Symbols	Description	Symbols	Description
	Do not dispose in trash		Heavy enough to cause severe injury
	can be recycled		Keep the Pack away from children
	Certification in European union area		Make sure the battery polarity well connected
	Electric shock hazard		Do not expose to fire
	Explosive gas		Operate according to Manual
	May leak corrosive electrolyte		

2.4 Emergency Responses

Manufacturer takes foreseeable risk scenarios into consideration and is designed to reduce hazards and dangers. However, if the following situation occurs, do as below:

Situation Occurs	Treatment Solution
Leakage	1. Avoid touch of leaking liquid or gas. If you touch the leaking electrolyte, do as below immediately. 2. Inhalation: Evacuate the contaminated area, and seek medical help. 3. Eye contact: Rinse eyes with flowing water for 15 minutes, and seek medical help. 4. Skin contact: Rinse contacted area thoroughly with soap and water, and seek medical help. 5. Ingestion: Vomiting, and seek medical help.
Fire	If the battery is on fire, try to extinguish the fire with fire fighting sand and evacuate people due to the situation.

Situation Occurs	Treatment Solution
Wet Packs	If pack is flooded or submerged, do not use it. Contact Manufacturer for technical assistance immediately.
Damaged PACKS	Damaged pack are dangerous and must be handled with special attention. They are no longer suitable for use and may cause danger to people. If the pack damaged, stop use it and contact the manufacturer.

Storage and Transportation 3

3.1 Storage Requirements

Place the battery follow the identification on the packing case during storage.
Do not put the battery upside down or sidelong.
The defective pack needs to be separated from other Batteries.
If the battery has not been used for more than six months, it needs to be charged.
Storage temperature is between -20 ~ 60℃,Recommended storage temperature: -10~35℃, Relative Humidity 10%-60% RH.

3.2 Transportation Requirement

PACK has been certified in UN38.3 (Section 38.3 of the sixth Revised Edition of the Recommendations on the Transport of Dangerous Goods: Manual of Tests and Criteria) and SN/T 0370.2-2009 (Part 2: Performance Test of the Rules for the Inspection of Packaging for Exporting Dangerous Goods). PACK is classified as category 9 dangerous goods.
The PACK shall not be transported with other inflammable, explosive or toxic substances; Ensure the original Package and label complete and recognizable.
Prohibit direct exposure to sunlight, rain, condensing water caused by temperature difference and mechanical damages.
There will be a drop in capacity during transportation and storage. Transportation temperature is between-10℃ to 45℃, relative humidity: 10%~90%RH.

4 Installation

Ensure to read the Guidance before installation in order to understand product information and safety cautions.
Operators should be well trained technicians and fully understand the whole photovoltaic system, grid network, working principle and national regional standards.
Installers must use insulating tools and wear safety equipment.
Device damages caused by failure to comply with storage, transportation, installation and use requirements specified in Guidance are not covered by Warranty.
PACK can only be installed indoors. Regarding indoor installation, please do not install it in the bedroom, living room, kitchen, etc.
Different types of batteries are not recommended to be mixed and used in parallel.
The battery system cannot be installed, dismantled, and maintained when it has been powered on.

4.1 Installation Environment

The ambient temperature for the installation of the battery system shall be above 0℃, below +50℃, and the humidity shall between 15% -85%.

4.2 Installation Required Tools

The following tools are required to install the pack:

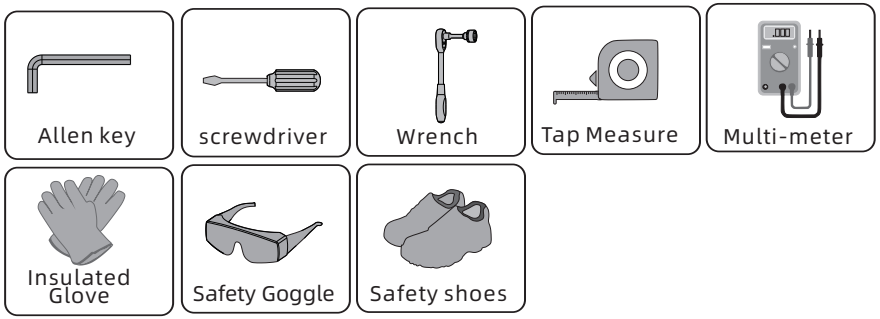

It is recommended to wear the following safety gear when dealing with the pack.

4.3 Check

4.3.1 Pre-installation Check

Check the package	Check the PACK package before opening it, if any abnormity is detected, do not open the package and contact your supplier.
Check the power	Check and confirm the PACK is powered off before installation.
Check deliverable	Check the quantity of all parts inside according to the package list. If there is any part missing or damaged, please contact your distributor.

4.3.2 Check Packing List

Hope 16.0LM-A1 Battery Pack					
Item No.	**Part Name**	**Qty**	**Item No.**	**Part Name**	**Qty**
1	Hope 16.0LM-A1 Battery Pack	1 pcs	5	SC35-8 lug	4 pcs
2	User Manual	1 pcs	6	+ power cable	1 pcs
3	Network cable	1 pcs	7	-power cable	1 pcs
4	warranty card	1 pcs	8	Castor (have already installed)	4 pcs

The power cord accessories in the package can only handle 100A for a long you need to match a high-power inverter, please make another set of power cords

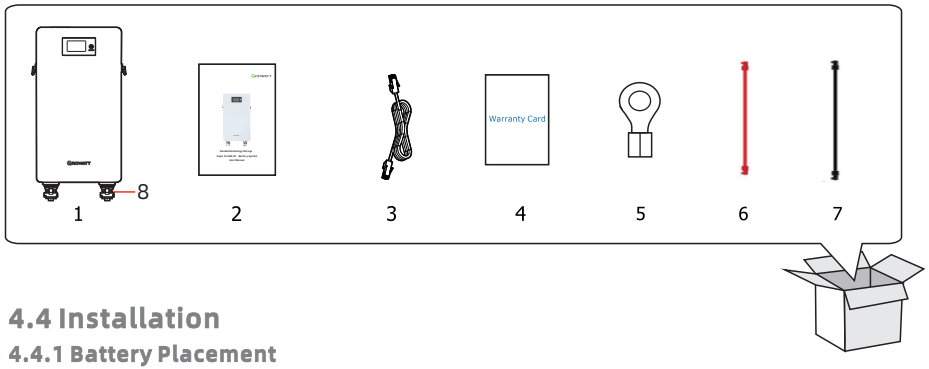

4.4 Installation

4.4.1 Battery Placement

1) The battery is unpacked from above and requires 4 people to lift it out. The grooves on the top of the battery and the casters on the bottom can bear the load.

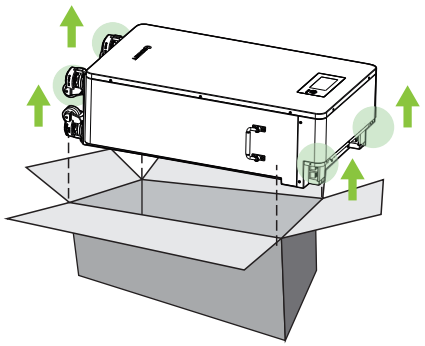

2) Please install indoors and ensure the level of the ground.
Make sure the batteries are mounted in the correct orientation. Please refer to the picture below (√ means acceptable, X means unacceptable).

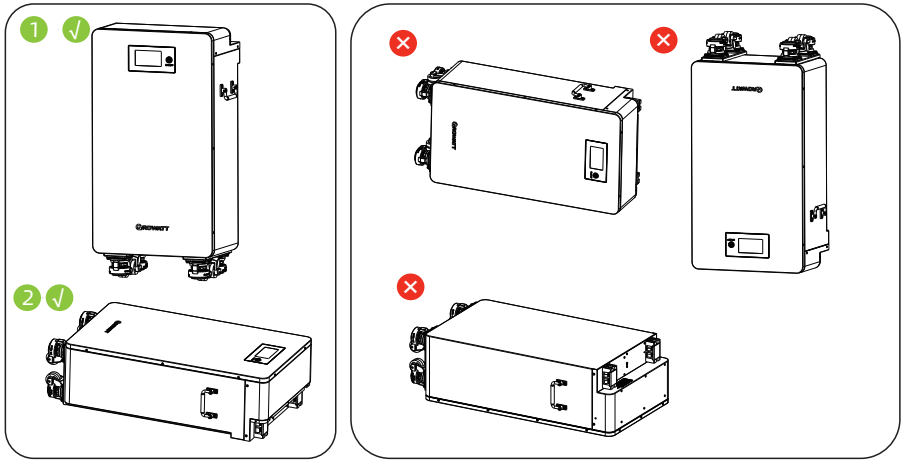

NOTE: Horizontal placement 2 is beneficial for heat dissipation.

4.4.2 Communication Cable Communication

It is recommended that the power line and communication line between the battery and the inverter should not exceed 2 meters.
inverter Communication interface definition:

Item	Crystal head picture	Serial no.	Definition	Serial no.	Definition
PCS		1	RS485_B	5	CAN_L
		2	RS485_A	6	GND_COM
		3	GND_COM	7	Wake-
		4	CAN_H	8	Wake+(5V)

Warning: Match the other companies' inverters by removing the PIN7 and PIN8 pins.

4.4.3 Single Battery Installation

Make sure the battery is in off mode and the battery breaker is off Ensure there are no tangled cables after battery wiring.

Step 1: Fixed wheels	Figure 3:Caster installation diagram
The four wheels of the base are shown in the picture. Rotate the pulleys clockwise and fix them to prevent the wheels from rolling.	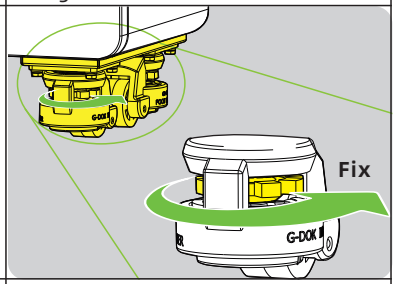
Step 2: Ground installation	Figure 4: Ground diagram
Fix the ground wire to the ground terminal with an M4 screw and fix the other end to the inverter. Note that the cross-sectional area of the ground wire is 16mm².	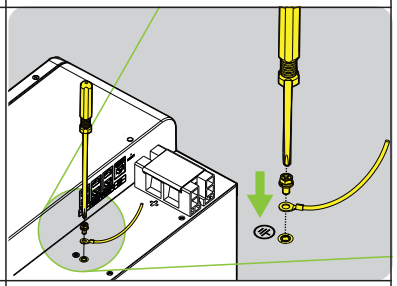
Step 3: Insert the network cable into the battery port.	Figure 5: Network cable connection diagram
Insert network cable into the inverter port (PCS port) of the battery, and the other end of the network cable into the network port of the inverter.	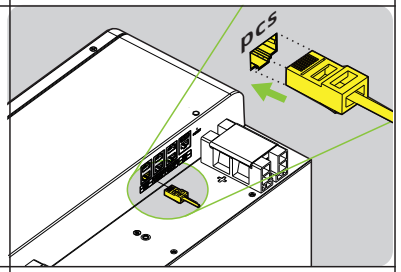
Step 4: Connecting Power Cable	Figure 6: Power line connection diagram
1. Fix the OT terminal of the power cable to the pair of "+/-" terminals of the battery. 2. Fix the other end to the breaker and then connect to the inverter. When connecting the power cable, make sure the direction of OT terminal is correct. Don't stack two OT terminals on one power port.	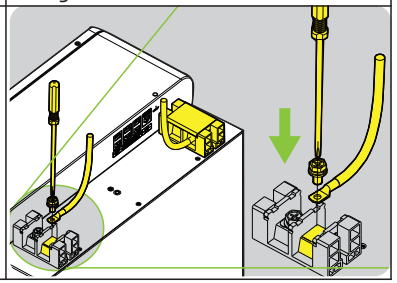

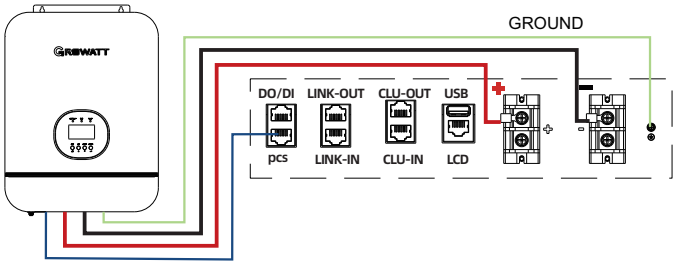

Figure 7: Single Battery Installation Diagram

For the specifications of the circuit breaker, we recommend using a molded case circuit breaker with a rated operating voltage greater than 80Vdc and a rated operating current greater than 250A.

4.4.4 General Installation of Battery Packs

Before parallel operation, please ensure that each single unit is operating normally. This method must be selected when the load is too large

1.Select equal-length power cables to connect to the junction box, meeting the current demand of up to 200A for a single unit; this method ensures the most balanced battery operation.

2 Communication lines are connected by choosing the method of capacity expansion or power expansion based on the customer's actual current.

Special attention: All power line pictures are schematic diagrams. Increase the wire diameter or the number of power lines according to the actual on-site current magnitude to prevent power line overload.

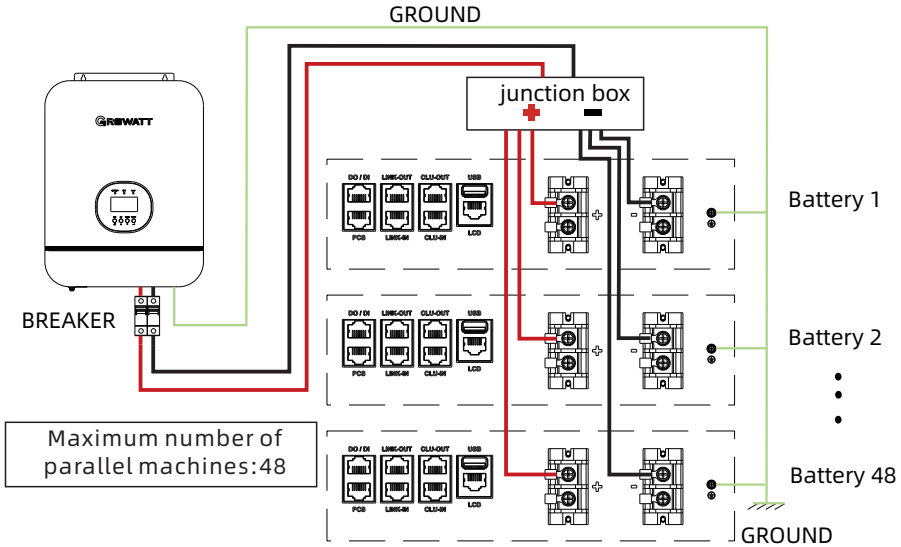

Figure 8: Universal Installation of Power Lines

4.4.5 Battery Capacity Expansion Installation

* Max Capacity Expansion parallel is 10pcs to creat a 16.0kw expanded energy storage system.

Step 1 Connect network cable

1. Insert the network cable into the inverter port (pcs port) of battery 1, and the other end insert into the BMS network port of the inverter .
2. Use network cable to connect the LINK-OUT port of battery 1 to the LINK-IN port of battery 2 , Connect the rest of the batteries in the same way until the last battery is connected.

Step 2 Connect Ground

Connect the ground terminal of each battery to the ground strip.

Step 3 Connect Power Cable

Warning: If the total current of a cluster expansion exceeds 400A or Parallel connection of more than three, use the general connection method for 4.4.4 battery packs for power cable connection; the communication cable can be connected as shown in the figure below;

Connect the +/- terminals of each battery to the +/- terminals of the next battery, and then connect the wires to the inverter.

If each battery exceeds 100A current, please add another set of power cables;

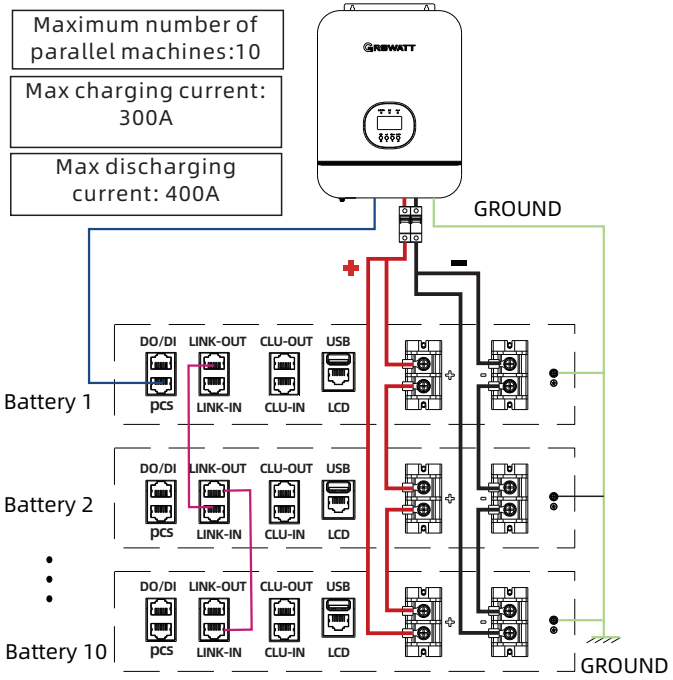

Figure 9: Capacity Expansion Installation Diagram

Note: When more than two batteries are connected in parallel, the maximum working current reaches 400 A. You are advised to connect the power cables of the first and last two batteries to the inverter to ensure more balanced charging and discharging of batteries and more security.

4.4.6 Battery Pack Power Expansion Installation

* Max Output Power Expansion parallel is 8pcs to creat a 81kw expanded energy storage system

Step 1: Connect Network Cable

1. Insert one end of the network cable inverter port(pcs port) into the inverter interface of battery 1 and the other end into the BMS network port of the inverter.
2. Connect the CLU-OUT connector of battery 1 and the CLU-IN connector of battery 2. Connect the rest of the batteries in the same way until the last battery is connected.

Step 2: Connect the Ground Wire

Connect the ground terminal of each battery to the grounding strip.

Step 3: Connect Power Cable

Connect the +/- terminal of each battery into the +/- terminal of the latter battery separately, and then connect the wires to the inverter.

If each battery exceeds 100A current, please add another set of power cables;

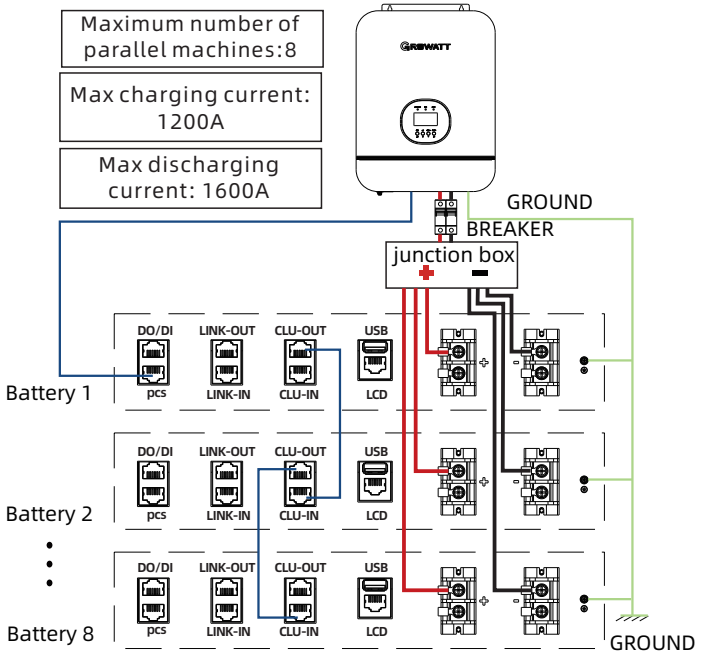

Figure 10: Installation Diagram for Power Expansion

4.4.7 Battery Pack Capacity and Power Expansion Installation

* Support up to 48 battery packs connected in parallel to form a 163KW expanded energy storage system

Step 1: Connect The Network Cable

1. Insert one end of the network cable inverter port(pcs port) into the inverter interface of battery 1 and the other end into the BMS network port of the inverter.
2. Connect the LINK-OUT connector of battery 1 and the LINK-IN connector of battery 2 . Connect the rest of the batteries in the same way until the last battery is connected.
3. Connect the CLU-OUT connector of battery 1 (cluster 1) and the CLU-IN connector of battery 1 (cluster 2) . Connect the rest of the batteries in the same way until the last battery is connected.

Step 2 Connect The Ground Wire

Connect the ground terminal of each battery to the grounding strip.

Step3 Connect The Power Cord

Warning: If the total current of a cluster expansion exceeds 400A or Parallel connection of more than three, use the general connection method for 4.4.4 battery packs for power cable connection; the communication cable can be connected as shown in the figure below;

Connect the +/- terminal of each battery into the +/- terminal of the Junction box separately, and then connect the wires to the inverter.

If each battery exceeds 100A current, please add another set of power cables;

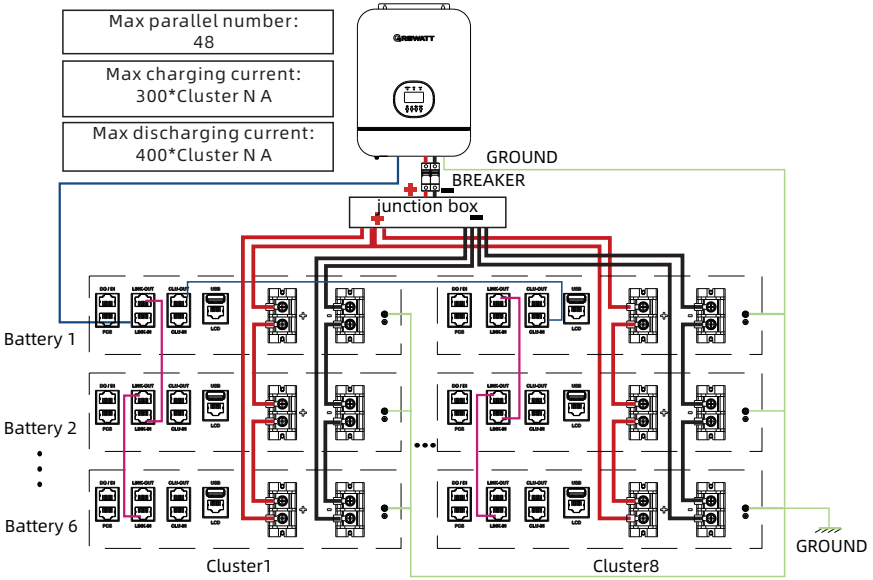

Figure 11: Installation Diagram for Capacity Expansion

5 Power on/off

If any abnormalities occur during the startup phase, power off the pack immediately. After problem confirmed, proceed again.
Make sure the inverter is turned off before checking the pack.

5.1 Power on

When multiple batteries are connected in parallel or multiple clusters of batteries are connected in parallel, press one of the battery power buttons and all the batteries connected in parallel can be turned on.

5.2 Power off

Press the power switch for 3 seconds and release it, battery off, LED lights off. If multiple batteries are connected in parallel, only press the power switch of any one of the batteries for 3 seconds and then release it, the other batteries can be turned off.

6 Maintenance Guide

6.1 System Failure Information List and Trouble Shooting Suggestions

Error code	Error Description	Error Cause	Suggested Actions
2	Discharge under voltage protection	Cell voltage / battery voltage below the threhold of under voltage protection	There is no safety risk, but user should stop discharging and arrange charging,
3	Charge over voltage protection	Cell voltage / battery voltage above the threhold of over voltage protection	There is safety risk. user should stop charging, and make it in idle or discharging until recoving to normal status.
60	External communication failure	Failed communication for battery and inverter	There is no safety risk, but user should stop using. Check whether communication between inverter and battery is normal. If battery and inverter communication failed, but ensure communication wire connection well. please contact installer for repairing battery.

Error code	Error Description	Error Cause	Suggested Actions
59	Internal communication failure	Communication loss of two battery packs in parallel	Check CAN connection of link-in and link-out between two battery PACKS.
10	Parallel failure	There is alarm in parallel mode	Check CAN connection of batteries. Check wire connection of batteries.
6	Dicharge short circuit	External short circuit of battery	Safety risk exist,please stop using it. User need contact installer for repairing
21	Pre-charge short circuit		
20	Pre-charge timeout		
9	Parallel ver failure	Different firmware version	Safety risk exist,please stop using it. User need contact installer for updating the same firmware version
36	Main circuit fault	BMS main power circuit fault	Safety risk exist,please stop using it. User need contact installer for repairing
12	MOS control fault	After turn off mosfet, there is still current.	Safety risk exist,please stop using it. User need contact installer for repairing

7 Technical Specifications

Functional parameters of Hope 16.0LM-A1are as below:

No.	Items	Specification
1	Battery Module	Hope 16.0LM-A1
2	Rated Capacity/Energy	314Ah/16.0kWh
3	Nominal Voltage	51.2V
4	Operating voltage	40 - 58.4V
5	Max.charging current(25℃)	150A
6	Max.discharging current(25℃)	200A
7	Max peak current	700A 200us
8	Battery Type	LiFePo4
9	Operative Charging Temperature Range	0℃~60℃
10	Operative Discharging Temperature Range	-20 ~ 60℃
11	Cooling	Natural Cooling
12	Dimension(W / D / H)	440/ 265 / 894 mm
13	Net Weight	120±2Kg
14	Gross Weight	130±2Kg
15	Installation Type	Floor hanging
16	Ingress Protection	IP 20
17	Safety Certificate	CE(EMC)/UN38.3/MSDS/ROHS/ IEC 62619
18	Communication port	CAN/RS485
19	Max.Parallel number	48 pcs
20	Recommended charge Instruction	Charge at constant current 150A until the voltage reaches 3.65V, then switch to constant voltage 3.65V till charge current drops to 15A.
21	Altitude (m)	≤ 2000m

Fault code table Appendix 1

No	Code	⚠	Remark
Minor			
1	51	SOC Low	SOC lows
2	60	Ex-Comm	The external communication is offline
3	55	Over Cell Volt	The voltage of the unit is too high
4	52	Under Total Volt	The total voltage is too low
5	53	Over Total Volt	The total voltage is too high
6	54	Under Cell Volt	The voltage of the unit is too low
7	56	Shut-Down Alarm	Shutdown alarm
8	57	OCC	The charge over current alarm is generated
9	58	OCD	The discharge over current 1 generates an alarm
10	61	Large Total Volt	Large internal and external pressure difference alarm
11	63	UTC	Low charging temperature
12	64	UTD	Low discharging temperature
13	65	OTC	High charging temperature
14	66	OTD	High discharging temperature
15	69	Large Chg-Cir	Charge circulation warning inside the system
16	70	Large Dsg-Cir	System internal discharge circulation warning
17	71	MOS OT	The temperature of the MOS tube is too high
18	72	Large Cell Diff	The unit pressure difference is large
19	73	Large Temp Diff	Large single temperature difference
20	75	ENV-OT	Ambient temperature is too high
21	80	Large Num	The number of parallel machines is too large
22	81	Upgrade	Updating

No	Code	⚠	Remark
Moderate			
1	67	OCP	Charge over power
2	68	ODP	Discharge over power
3	76	Clu-Comm	Inter cluster communication failed
4	77	MCU SC	MCU short circuit
5	78	AFE SC	AFE short circuit
6	2	Under Total Volt	Total voltage low protection
7	3	Over Total Volt	Total voltage high protection
8	4	Under Cell Volt	Single voltage low protection
9	7	OCC	Charging current large protection
10	8	OCD	Discharge current large 1 protection
11	13	UTC	Low charging temperature protection
12	14	UTD	Low discharge temperature protection
13	15	OTC	High charging temperature protection
14	6	OTD	High discharge temperature protection
15	17	Pal OCC	Parallel Charge over current protection
16	18	Pal OCD	Parallel Discharge over current protection
17	19	Addr Overlap	Parallel address is identical
18	34	Clu OCC	Cluster Charging over current protection
19	35	Clu OCD	Cluster discharge overs current protection
20	10	Large Temp Diff	Large single temperature difference protection
21	41	ENV OT	High ambient temperature
22	43	Clu Overlap	Inter cluster heavy sign fault
23	44	AFE OTC	AFE charging over temperature

No	Code	⚠	Remark
24	45	AFE UTC	AFE charging low temperature
25	46	AFE OTD	AFE discharging over temperature
26	47	AFE UTD	AFE discharging low temperature
27	59	Inter-Comm Can	The internal can is disconnected
28	5	Over Cell Volt	Single voltage high protections
Severe			
1	6	SCD	Short-circuit protection
2	9	Pal-Ver	Parallel version inconsistency protection
3	10	Pal-Fail	Parallel failure protection
4	11	Large Total Volt	Large internal and external pressure difference protection
5	12	MOS CTL-Fail	MOS tube control fail-safe
6	20	Pre-fail	Pre-charge failure
7	21	Pre-SC	Pre-charge short circuit
8	22	AFE Comm	AFE is offline
9	23	Cell Comm	Cell voltage offline
10	24	Temp Comm	Cell temperature offline
11	25	TotalVolt Sample	Total voltage sampling failure
12	26	Temp SC	Temperature short circuit
13	27	LoadVolt Sample	External total pressure sampling failure
14	28	Eeprom Fail	Parameter loading failed
15	29	AFE OV	AFE over voltage protection
16	30	AFE UV	AFE under voltage protection
17	31	AFE OCC	AFE charge over current protection

No	Code	⚠	Remark
18	32	AFE OCD1	AFE discharge over current protection
19	33	MS_Volt Diff	Large master/slave pressure difference
20	36	Bus Open	The main circuit is open
21	37	AFE OCD2	AFE discharge over current level 2
22	38	MOS OT	MOS tube over temperature protection
23	42	Clus Ver	Versions between clusters are inconsistent
24	1	Soft Start Fail	Software startup failure
25	74	DC_fault	No DC current alarm is generated
26	48	Safe_Err	Chip self-test failed
Action			
1	151	BMS_Pwr	System 0 is powered on and system 1 is powered off
2	152	PreChg	Pre-charge action: 0 off, 1 on
3	153	PreDsg	Pre-release action: 0 off, 1 on
4	154	Chg	The charging MOS operates: 0 turns off, 1 turns on
5	155	Dsg	The discharge MOS operates, with 0 off and 1 on
6	200	TimeSet	Time setting
7	203	TouchLCDSet	TouchLCD set
8	205	USBSet	USB set

Appendix 2

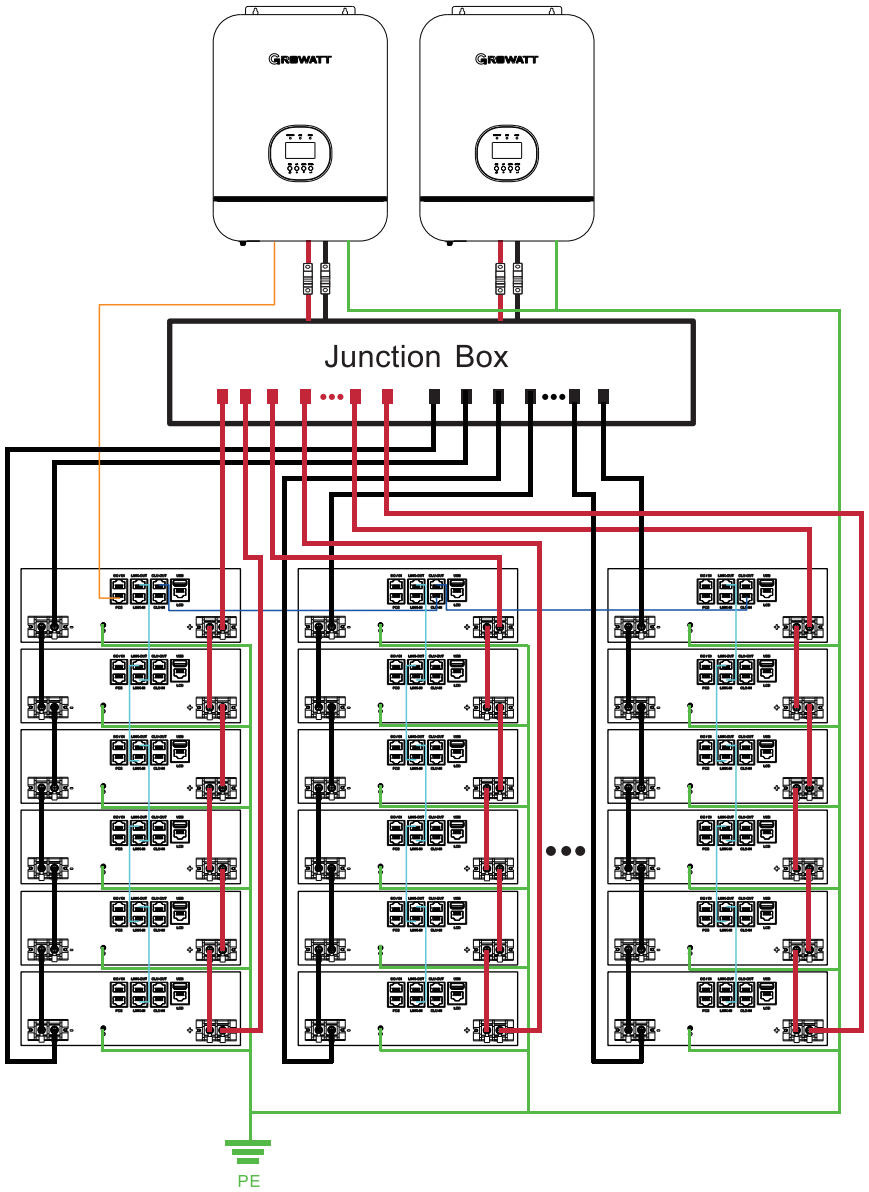

Figure 12: Parallel machines effect drawing